SurfacePrep

postpro SF100

SPECIFICATION SHEET

AUTOMATED CHEMICAL VAPOR SMOOTHING TECHNOLOGY DELIVERING END-USE PARTS FOR HIGH VOLUME PRODUCTION.

AMT's PostPro SF100 is a patented chemical vapor smoothing solution for post-processing thermoplastic polymer 3D printed parts. The PostPro SF100 is a step up in post processing technology and includes advanced features to provide a state of the art production experience.

PostPro SF100 has been designed and built for production environments and high volume throughput to enable industrial scale additive manufacturing.

PROPRIETARY PATENTED TECHNOLOGY
Based on 5 years of fundamental research at the University of Sheffield and 3 years of industrial development. The PostPro SF100's patented technology has been proven within the industry.

ENHANCING PART PROPERTIES
The only technology that smooths and seals the surface and internal cavities of 3D printed polymer parts, while also improving mechanical properties.

COMPATIBILITY
Works with powder and extrusion-based additive manufacturing technologies. Tested with over 100 thermoplastic polymers including nylons and TPU/TPE flexible materials. Ideal for SLS, MJF, HSS and FFF applications.

INDUSTRY 4.0 AUTOMATION
Industry 4.0 ready with the capability to seamlessly connect with external MES and ERP systems.

COMPLIES WITH ALL INDUSTRIAL HEALTH AND SAFETY STANDARDS
Proprietary industry accepted solvent consumables validated in highly regulated applications from medical and dental to consumer and food applications. PostPro SF100 works with a range of solvents tailored to your specific requirements.

SAFE AND SUSTAINABLE
Fully closed-loop system to ensure operator and end user safety. Zero system waste and full consumable recycling.

PART EXAMPLES:

BEFORE

AFTER

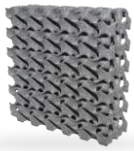
BEFORE

AFTER

	EU	US
External Dimensions (WDH)	830 x 1,400 x 1830 mm	33 x 55.5 x 72 in
Weight	850 Kg	1,875 lbs
Recommended Operating Area	2,350 x 3,200 mm	92.5 x 126 in
Capacity		
Process Chamber Dimensions (WDH)	400 x 600 x 400 mm	15.7 x 23.6 x 15.7 in
Process Chamber Volume	96 Litres	96 Litres
Consumable Canister Volume	10 Litres	10 Litres
Power		
Three Phase	3 x 400V, 16A, 50/60Hz, (L1+L2+L3+N+PE)	3 x 480V, 16A, 50/60Hz, (L1+L2+L3+PE)

Additional electrical supplies can be accommodated via an optional internal transformer. Please contact AMT for further details.

SAFETY AND CERTIFICATION
PostPro SF100 is fully CE certified and has advanced safety features.

*Specifications subject to change

amt postpro®

FEATURES:

- **Safety Circuit:** Front mounted E-Stop button
- **User Interface (HMI):** 1080p Full HD. 21.5" Touch Screen
- **Consumable Management:** RFID canister recognition and fool proof connections
- **Multiple Consumables:** Can be used with all of AMT's finishing agents
- **Small Footprint:** Reduced footprint and working area requirements
- **Ergonomic Chamber Loading:** Front loading process chamber for operator ease and comfort
- **User Access:** RFID controlled user access
- **Easy Transport:** Optional removable stabilizers for ease of movement and positioning during installation
- **Flexible Power Supply:** Optional internal transformer to suit the majority of local power supplies*

DIMENSIONS

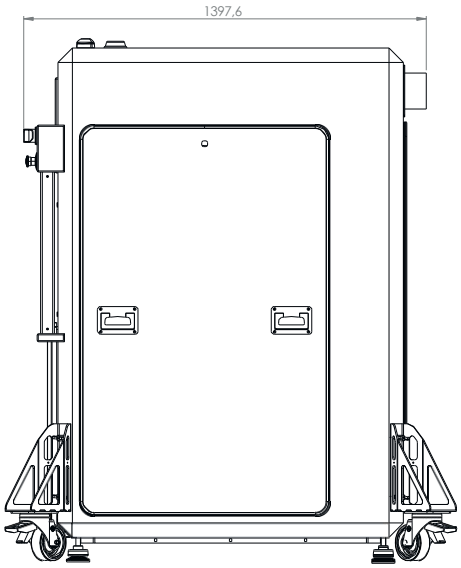

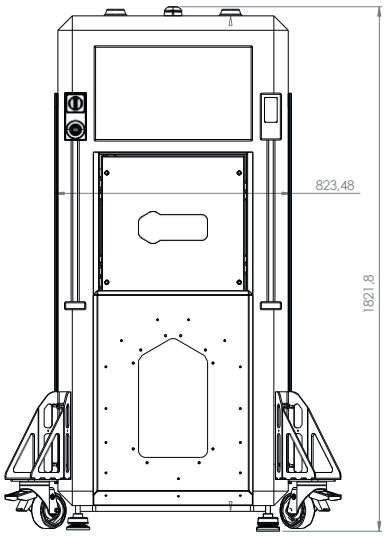

*Please consult with AMT to confirm suitability

CE

amtechnologies.com

*Specifications subject to change